Feb.1.2026 Copyright 2026 HIROSE ELECTRIC CO., LTD. All Rights Reserved.
In case of consideration for using Automotive equipment / device which demand high reliability, kindly contact our sales window correspondents.

	COUNT	DESCRIPTION OF REVISIONS	BY	CHKD	DATE		COUNT	DESCRIPTION OF REVISIONS	BY	CHKD	DATE
△					. .	△					. .
△					. .	△					. .
△					. .	△					. .

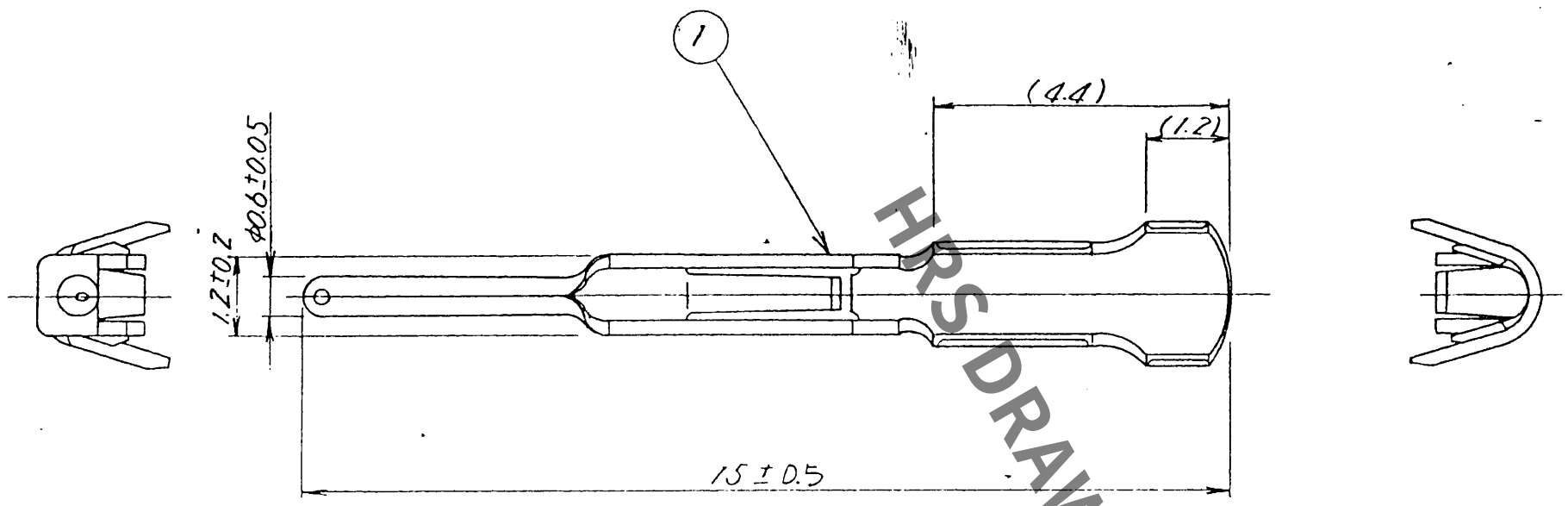

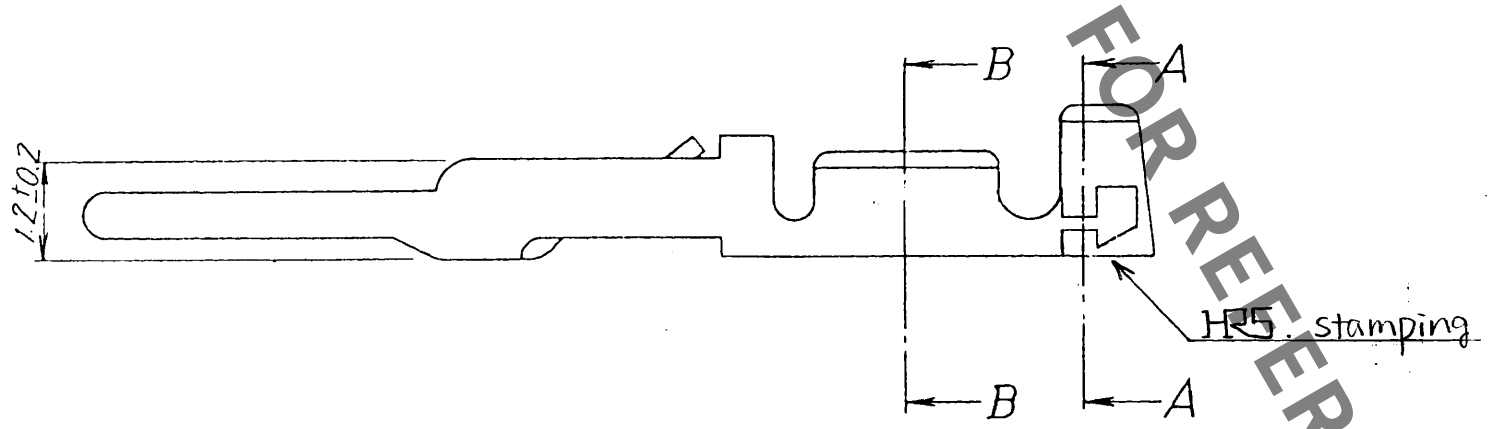

B−B

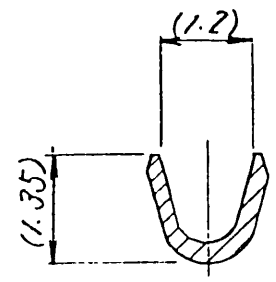

A−A

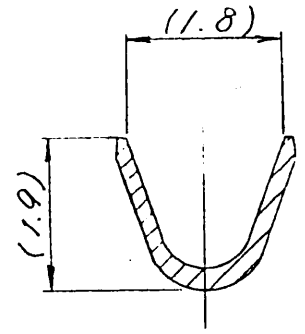

Note 1 Applicable wire : AWG #24 ~ #30

HRS DRAWING FOR REFERENCE

NO.	MATERIAL	FINISH , REMARKS	NO.	MATERIAL	FINISH , REMARKS
1	Phospor bronze	Silver plated (Quantity: 100)			

CODE NO. (OLD)	DRAWN	DESIGNED	CHECKED	APPROVED	RELEASED
DRAWING NAME: DRAWING FOR APPROVAL	J. Kaneko 4.13.93	J. Kaneko 4.13.93	M. Goshida 4.13.93	M. goshida 4.13.93	

SCALE 10 : 1	DRAWING NO. ADC-10238	PART NO. RP17-PC-122
UNITS mm	HRS HIROSE ELECTRIC CO., LTD.	CODE NO. CL 113-0504-9

TO
R

FORM No. 229